LD20-7.5 A3

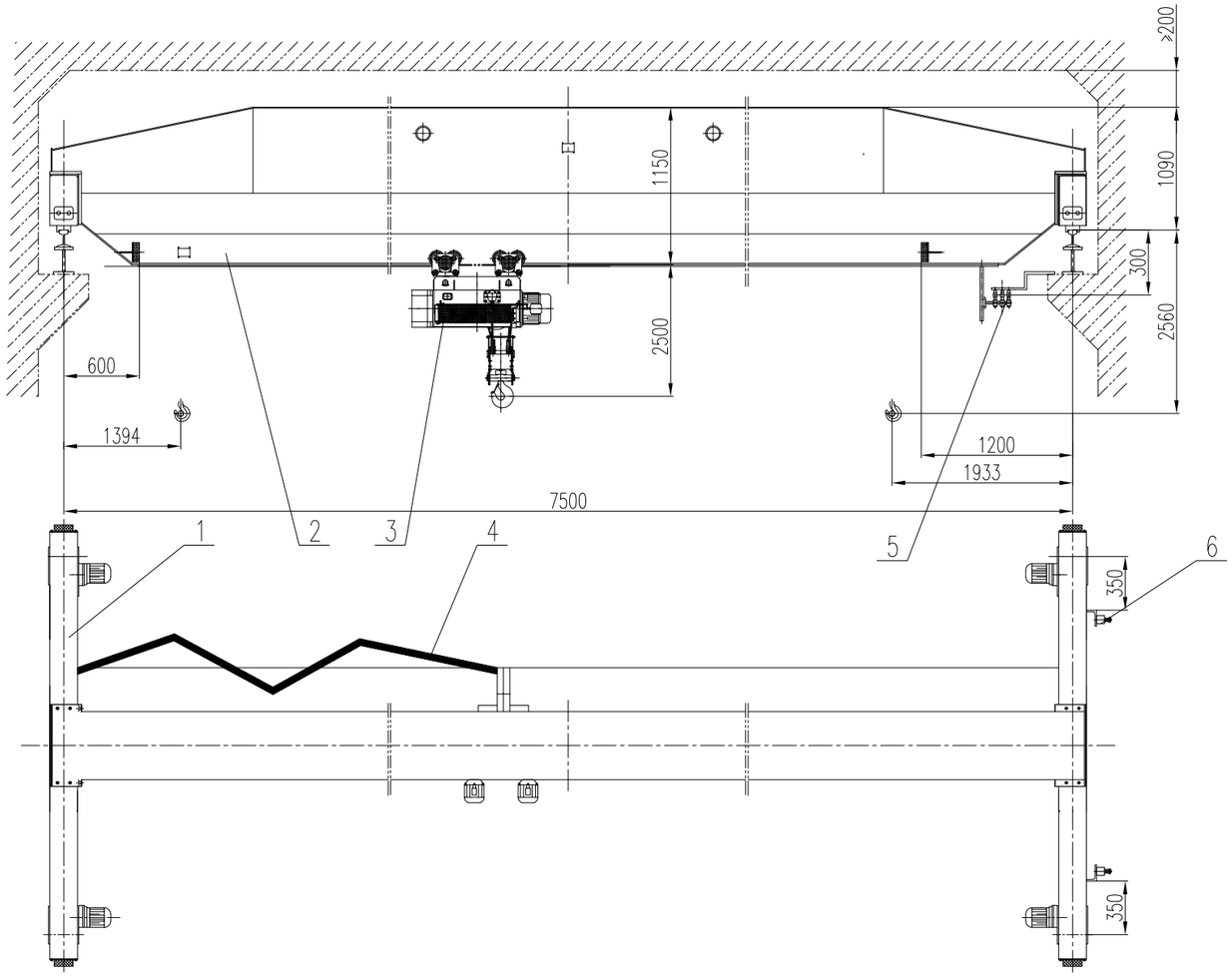

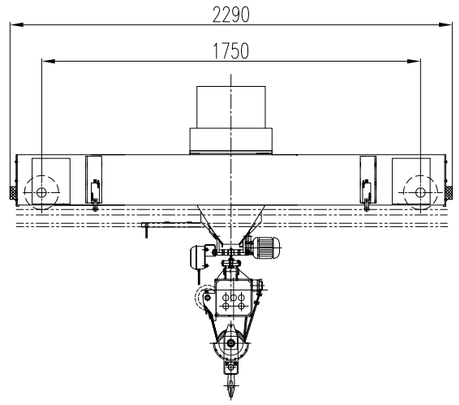

Note:

1.Manufacture, install and use according to JB/T 1306-2008
2.Distance from workshop backspin to crane peak should ≥200mm
3.Control mode: pendent control

Technical Parameters

Crane Travelling			Electric Hoist		
Span (m)		7.5	Type		CD1 20t
Travelling Speed (m/min)		20	Lifting Speed (m/min)		3.3
Buffer Stroke (mm)		50	Lifting Height (m)		6.0
Max.Wheel Load (kN)		97.9	Lifting Motor	Type	ZD1 52-4
Rail Type		P30		Power (kW)	18.5kW
Wheel Diameter (mm)		4*ø240	Travelling Speed (m/min)		14
Crane Travelling Motor	Type	SZW-150	Hoist Travelling Motor	Type	ZDY1 22-4
	Power (kW)	2*1.5kW		Power (kW)	2*1.5kW
	Rotation Speed (r/min)	1400	Power Supply	3P 460V 60Hz	
Crane Travelling Reducer	Type	LDA			
	Ratio	58.8			

SN	Drawing number	Description	Material	Qty	Single Weight (kg)	Total Weight (kg)	Remark
6		Travelling limit Switch	Subassembly	2			
5		Crane Power Supply	Subassembly	1			
4		Hoist Power Supply	Subassembly	1			
3		Hoist	Subassembly	1			
2		Girder	Subassembly	1			
1		End Beam	Subassembly	2			

Mark	Disposal	Change file	Signature	Date

Design		Standard	
Check		Electric	
Verify		Approval	
Technic		Date	

LDA single girder overhead crane

LDA20t-7.5m A3

General layout

RAMHOIST

Page one	Weight	Scale
Total	5450kg	

Reference drawing