LDA10-12 A3

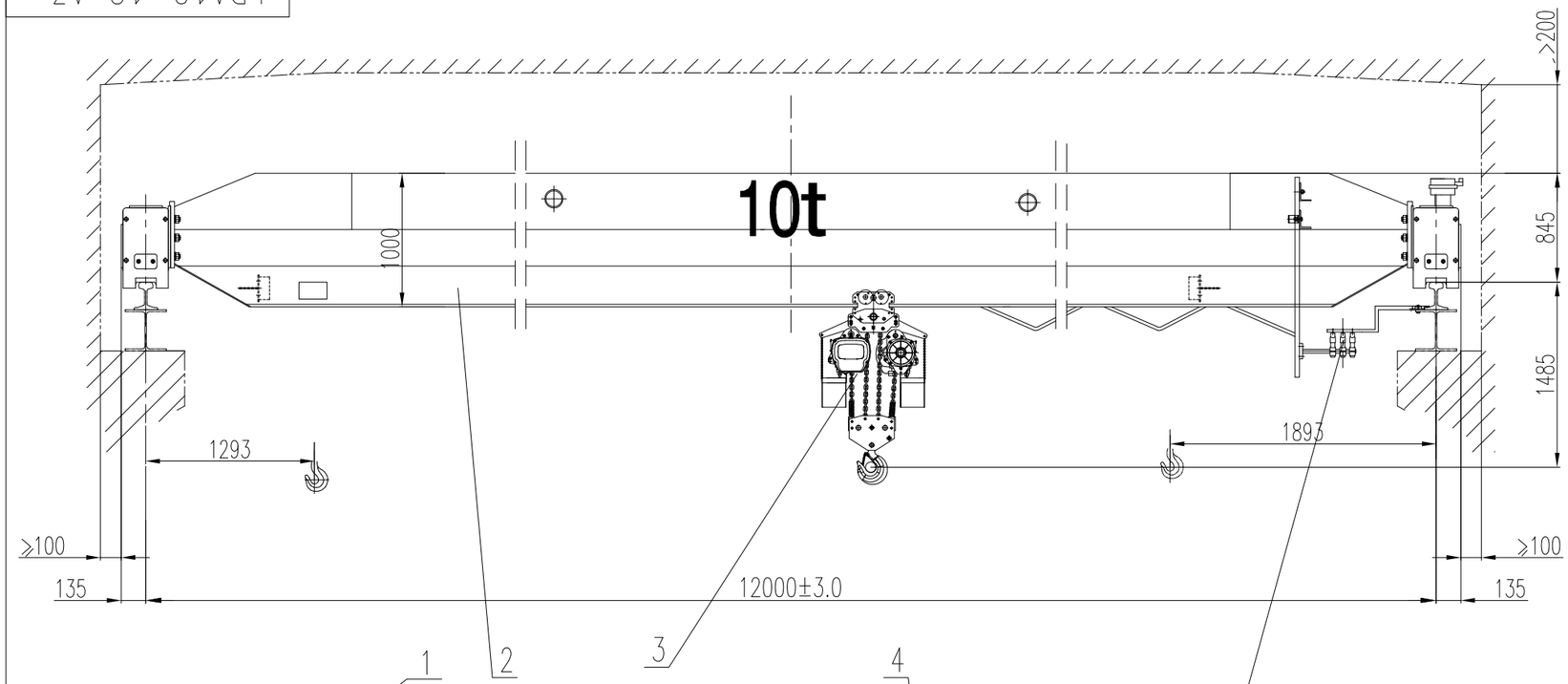

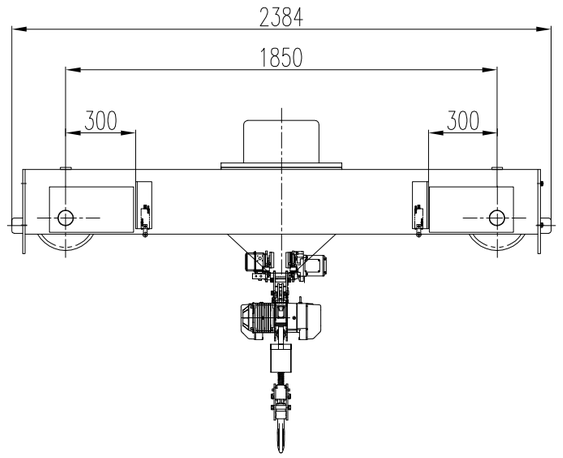

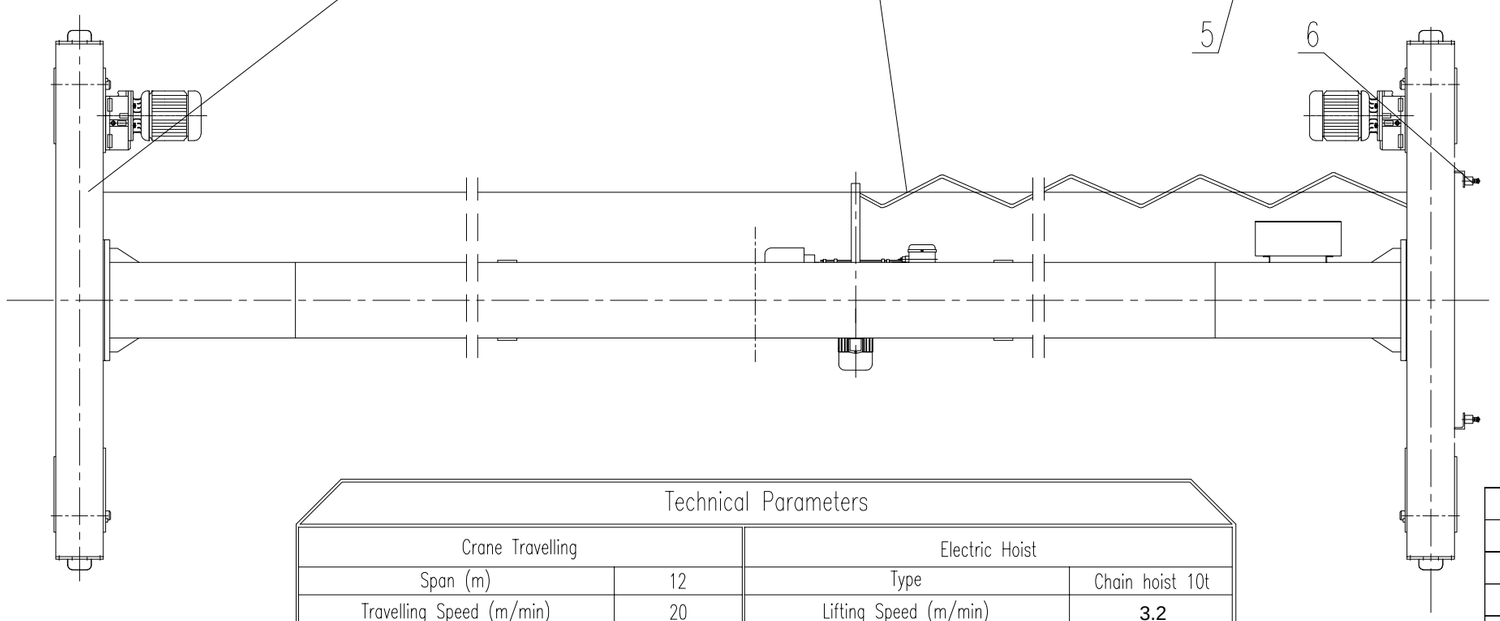

Note:

1.Manufacture, install and use according to JB/T 1306-2008
2.Distance from workshop backspin to crane peak should ≥200mm
3.Control mode: pendent control

Technical Parameters

Crane Travelling			Electric Hoist		
Span (m)		12	Type		Chain hoist 10t
Travelling Speed (m/min)		20	Lifting Speed (m/min)		3.2
Buffer Stroke (mm)		30	Lifting Height (m)		6
Max.Wheel Load (kN)		57.1	Lifting Motor	Type	NA
Rail Type		P22		Power (kW)	2*3.0kW
Wheel Diameter (mm)		4*ø215	Travelling Speed (m/min)		25
Crane Travelling Motor	Type	SZW-150	Hoist Travelling Motor	Type	NA
	Power (kW)	2*1.1kW		Power (kW)	0.75kW
	Rotation Speed (r/min)	1400	Power Supply	3P 230V 60Hz	
Crane Travelling Reducer	Type	LDA			
	Ratio	58.8			

SN	Drawing number	Description	Material	Qty	Single Weight (kg)	Total Weight (kg)	Remark
6		Travelling limit Switch	Subassembly	2			
5		Crane Power Supply	Subassembly	1			
4		Hoist Power Supply	Subassembly	1			
3		Hoist	Subassembly	1			
2		Girder	Subassembly	1	2020	2020	
1		End Beam	Subassembly	2			

Mark	Disposal	Change file	Signature	Date

Design		Standard	
Check		Electric	
Verify		Approval	
Technic		Date	

LDA single girder overhead crane

LDA10t-12m A3

General layout

RAMHOIST

Sheet of	Weight	Scale
Total	4140kg	

Reference drawing