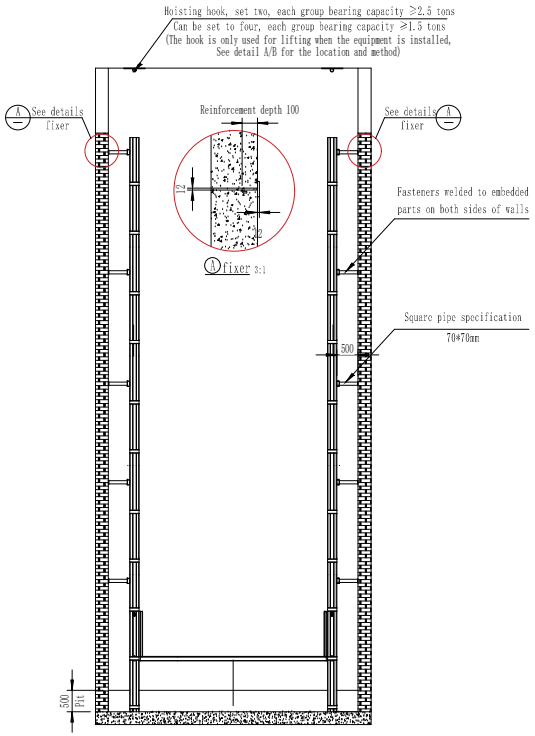

Platform front view

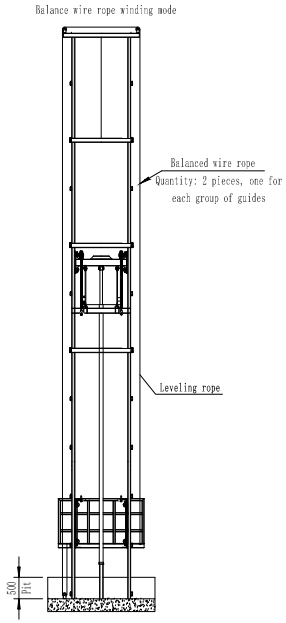

Platform side view

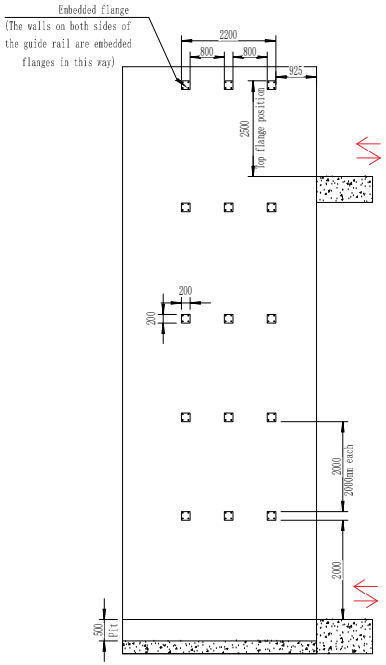

Side view of fastener

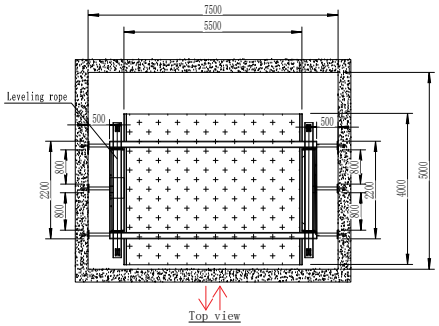

Top view

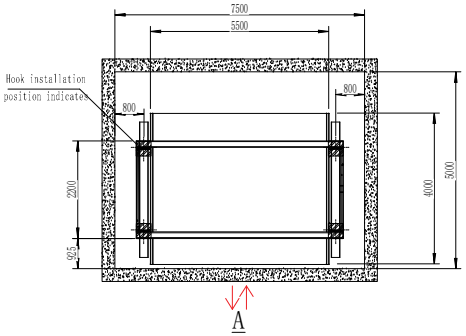

A

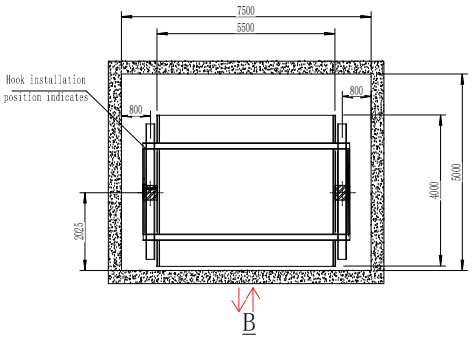

B

Technical parameters:

1. Load-bearing hooks are required in the well. See the figure for the positions and load-bearing requirements. The hooks are only used for hoisting equipment during device installation
2. The door of the floor at the entrance adopts the mode of electrical interlock. If the door is not closed, the equipment cannot operate. The door of the floor cannot be opened until the equipment reaches the target floor
3. Hydraulic station has pressure detection device, when overload buzzer alarm, equipment stop running
4. The winding mode of the balanced wire rope is shown in the figure
5. Guide rail fasteners (flanges) should be embedded in the well. The size of the flanges is 200*200*12mm, and the flanges should be made with planting reinforcement, 12mm in diameter and 100mm in depth, as shown in the figure
6. The hook installation position is shown in the figure A and B (you can install one of them).

Time 16/03/2023		
	Name	Details of fixing method and bearing hook
Draw		
Examination		
		A3
		proportion 1:110